CrustBuster
SPEED KING INC.

Field Loader

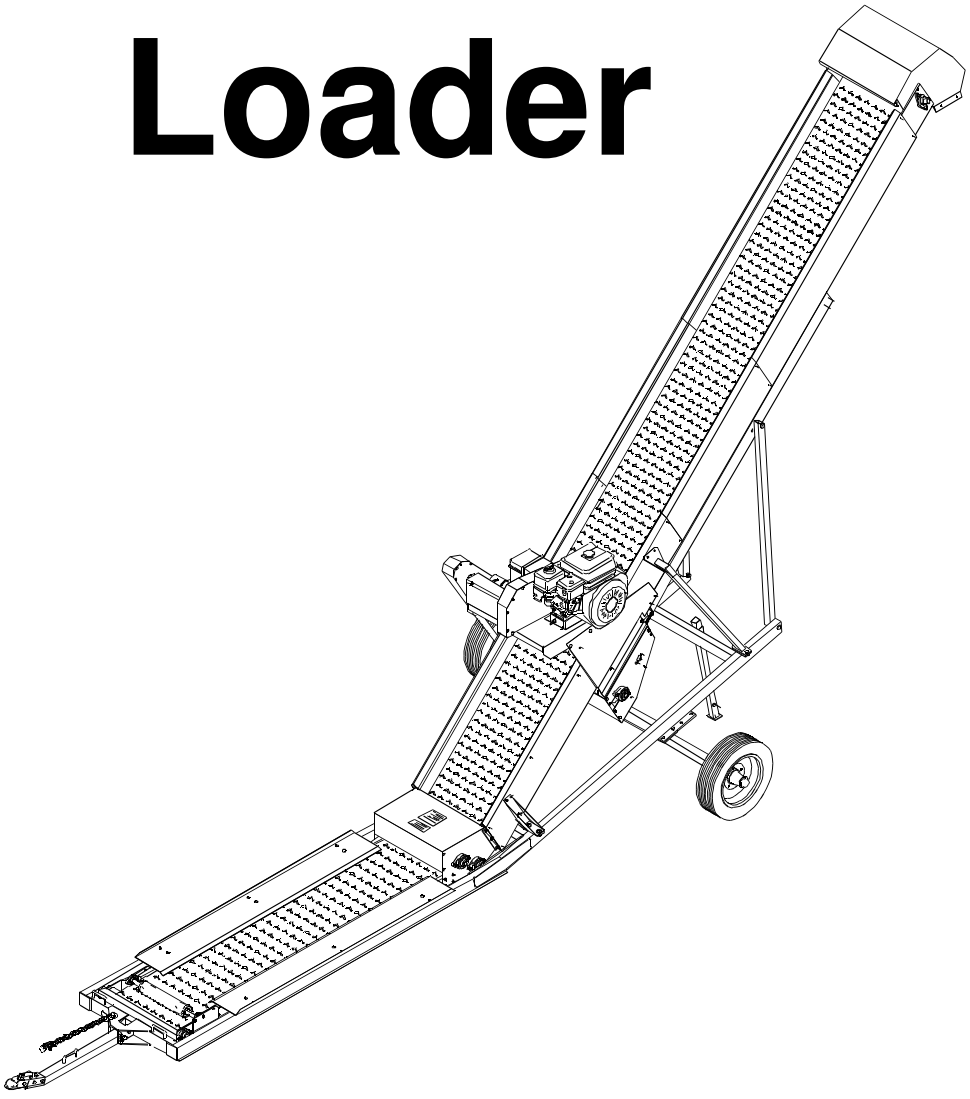

OWNER'S MANUAL

#03240900 (02-01)

Table of Contents

Warranty Information . . . . . Inside Front Cover
Operator Qualifications / Sign Off Sheet 1
Safety Instructions 2-3
Assembly:
- Main Conveyor 4-5
- Belt 6
- Gas Engine 7
- Electric Motor 8
- Guard 9

Before Operation 10
Operation 10
Transporting 10
Lubrication 11
Storage 11
Repair Parts:
- Undercarriage & Hitch 12-13
- Pan & Transition 14-15
- Drive 16-17
- Gas Drive 18-19
- Electric Drive 20-21
- Pan 22-23
- Spout 23
- 3' Extension 24-25

Warranty

CrustBuster/Speed King, Inc. of Dodge City, Kansas, warrants consumer products, so far as the same is of our own manufacture, against defects in material and workmanship under normal and reasonable use for a period of one (1) year after date of delivery to the original purchaser. Our obligation under this warranty is limited, however, to furnishing a replacement part for a defective part, or at our option to repair the defective parts without charge, either method F.O.B. our works, provided the consumer gives CrustBuster/Speed King,Inc. written notice within ten (10) days after said part appears to be defective and affords CrustBuster/Speed King,Inc. an opportunity to inspect. Unless otherwise expressly agreed to by CrustBuster/Speed King,Inc., the consumer shall bear the expense of installation.

CrustBuster/Speed King, Inc. will not be liable for consequential damages where the loss is commercial, including but not limited to loss of profit, delays or expenses.

This warranty sets forth the extent of our liability. The foregoing is in lieu of all other warranties, expressed or implied, including any warranties that extend beyond the description of the product.

Operator Qualifications

Operation of this conveyor shall be limited to competent and experienced persons. In addition, anyone who will operate or work around conveyor must use good common sense. In order to be qualified, he or she must also know and meet all other requirements, such as:

1. Some regulations specify that no one under the age of 16 may operate power machinery. It is your responsibility to know what these regulations are in your area or situation.

2. Current OSHA regulations state in part: "At the time of initial assignment and at least annually thereafter the employer shall instruct EVERY employee in the safe operation of servicing of all equipment with which the employer is, or will be involved."

3. Unqualified persons are to STAY OUT of the work area.

4. A person who has not read and understood all operating and safety instructions is not qualified to operate the machinery.

FAILURE TO READ THIS CONVEYOR MANUAL AND ITS SAFETY INSTRUCTIONS IS A MISUSE OF THE EQUIPMENT.



Sign Off Sheet



As a requirement of OSHA, it is necessary for the employer to train the employee in the safe operation and safety procedures with this conveyor. We include this sign off sheet for your convenience and personal record keeping.

DATE	EMPLOYER	EMPLOYER'S SIGNATURE

BE ALERT!

Your Safety is involved.

General Safety Statement

WATCH FOR THIS SYMBOL. IT POINTS OUT IMPORTANT SAFETY PRECAUTIONS. IT MEANS "ATTENTION —— BECOME ALERT!" YOUR SAFETY IS INVOLVED.

It is your responsibility as an owner, operator, or supervisor to know and instruct everyone using this conveyor at the time of initial assignment and at least annually thereafter, of the proper operation, precautions, and work hazards which exist in the operation of this conveyor in accordance with OSHA Regulations.

Safety Is No Accident

The following safety instructions, combined with common sense, will save your equipment from needless damage and the operator from unnecessary exposure to personal hazard. Pay special attention to the caution notes in the text. Review this manual at least once each year with new and/or experienced operators.

1. Read and understand the operator's manual before operating this conveyor. Failure to do so is considered a misuse of the equipment.
2. Make sure conveyor is secure before operating.
3. Always keep children away from conveyor when operating.
4. The motor controls and reset button must be located so that the operator has a full view of the entire operation.
5. During regular operation of the conveyor, one person should be in a position to monitor the operation. A second person should always be nearby to shutdown the conveyor in case of an emergency.
6. Make sure everyone that is not directly involved with the operation is out of the work area before beginning the operation.
7. Keep the work area clear of grease, oil, water, and other objects that could cause a slip or a fall.
8. Make sure all safety devices, shields, and guards are in place and are functional before beginning the operation.

9. Shut off power to adjust, service, or clean the conveyor.

10. Keep hands, feet, and clothing away from moving parts. It is a good idea to remove all jewelry before starting the operation.

11. Visually inspect the conveyor periodically during operation for signs of excessive vibration, loose fasteners, and unusual noises.



Electric Safety

1. Electric motors and controls should be wired by a qualified electrician and meet all standards set by Federal, State, and Local Electrical Codes.

2. Make certain electric motors are grounded.

3. A magnetic starter should be used to protect your motor.

4. Your motor must have a manual reset button.

5. Electrical power must be disconnected before resetting your motor.

6. A main power disconnect switch, with the ability to be locked in the off position, should be provided. The switch should be locked in the off position whenever work is to be done on the conveyor or the conveyor is going to be left unattended.

7. Disconnect power before resetting motor overload.



CAUTION

1. Read and understand instruction manual before operating.
2. Keep all safety shields and devices in place.
3. Make certain everyone is clear before operating machine.
4. Keep hands, feet, and clothing away from moving parts.
5. Shut off power to adjust, service, or clean.
6. Make sure machine is secured before operating.
7. Disconnect power before resetting motor overload.
8. Make certain electric motors are grounded.

Assembly

The conveyor has been pre-assembled into two main assemblies to simplify final assembly. As with any large machinery, assembly safety is the first concern. Choose a clear, solid, level work area that is large enough to provide room for forklifts and cranes to move easily. Any slings, chains, or stands used to lift or support should be of adequate capacity and in good condition.
NOTE: Axle spacer is required if unit has 3' extension. See Step #1A.

Main Conveyor

STEP #1. *Refer to Figure #1.*
Position the main assembly (1) on the ground allowing room in front of the incline section to attach the upper 15' incline section. The main assembly (1) consists of the feed pan, lower 10‘ incline drive assembly, and undercarriage.

Lift the axle assembly (2) so the three plates on the axle match the three plates on the undercarriage. Attach the center plate with 2- ½" x 1½" HHCS (6) and nylock nuts (7) and the outer plates with 4- 5/8" x 1½" HHCS (3) and nylock nuts (4)

If tires were included with your shipment, attach them to hubs with lug nuts provided. If you are providing your own tires choose a tire that will fit the 15" x 6" wide rims (5) provided and is approximately 30" to 32" tall. Each tire carries about 1000 pounds. Choose a tire that will fit your towing speeds and needs.

Figure #1

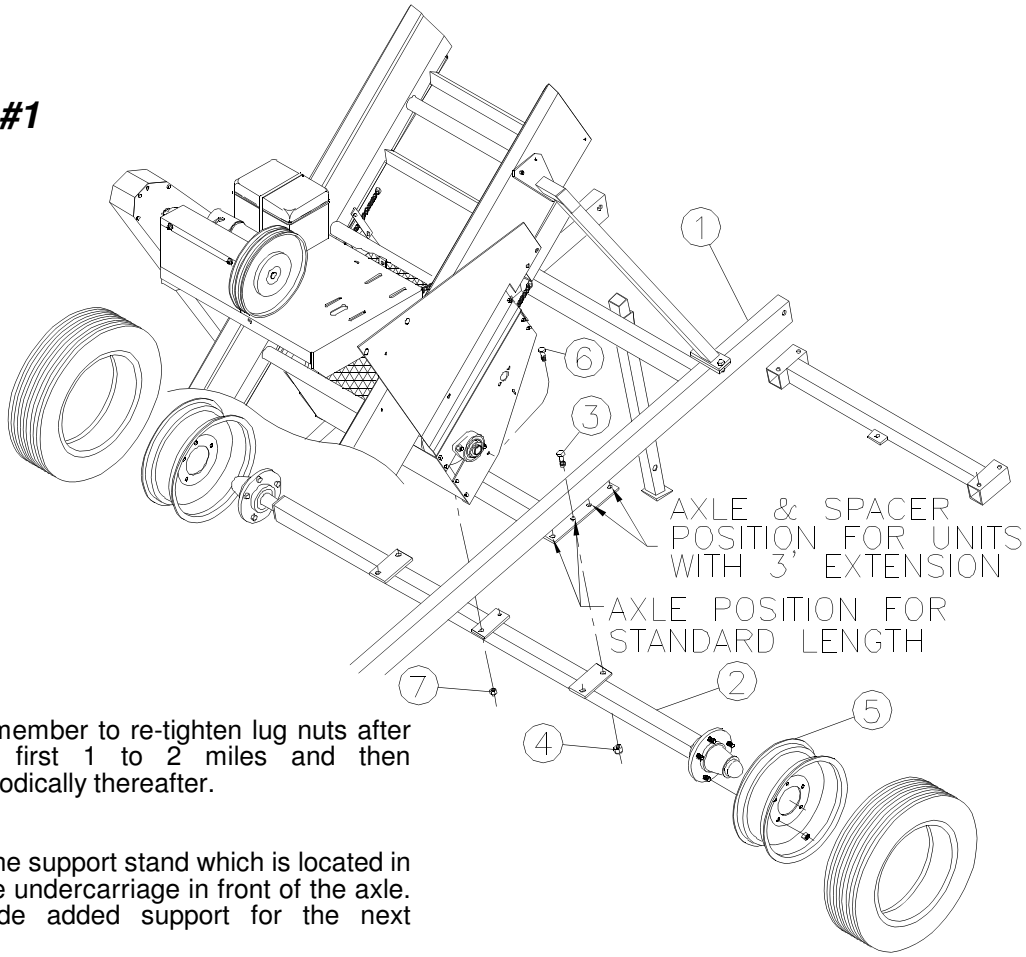

Remember to re-tighten lug nuts after the first 1 to 2 miles and then periodically thereafter.

Lower and pin the support stand which is located in the center of the undercarriage in front of the axle. This will provide added support for the next assembly step.

STEP #1A.
With the 3' incline extension the axle must be moved toward the discharge end. Attach center plate of axle to spacer with 2- ½" x 1½" HHCS (6) and nylock (7). And outside plates to undercarriage plates with 4- 5/8" x 4" HHCS.

Assembly

STEP #2. *Refer to Figure #2.*
Position spout (2) over the head roller frame on the 15' incline assembly (1) and attach with 6-5/16" x 1" HHCS (3), lock washers (4), and hex nuts (5).

Sling and lift the 15' incline assembly (1) up to the end of the main assembly (6). Attach trough sections and lower channel support with 14-3/8" x 1" HHCS (7), lock washers (9), and hex nuts (8). Using 4-1/2" x 1 1/4" HHCS's (10), lock washers (11), and hex nuts (12), bolt channel support to drive sides.

Install upper support tubes (13) to front tubes of undercarriage and each side of channel support with 2-3/4" x 3½" (15) and 2-3/4" x 5" HHCS (14) and 3/4" nylock nuts (16).

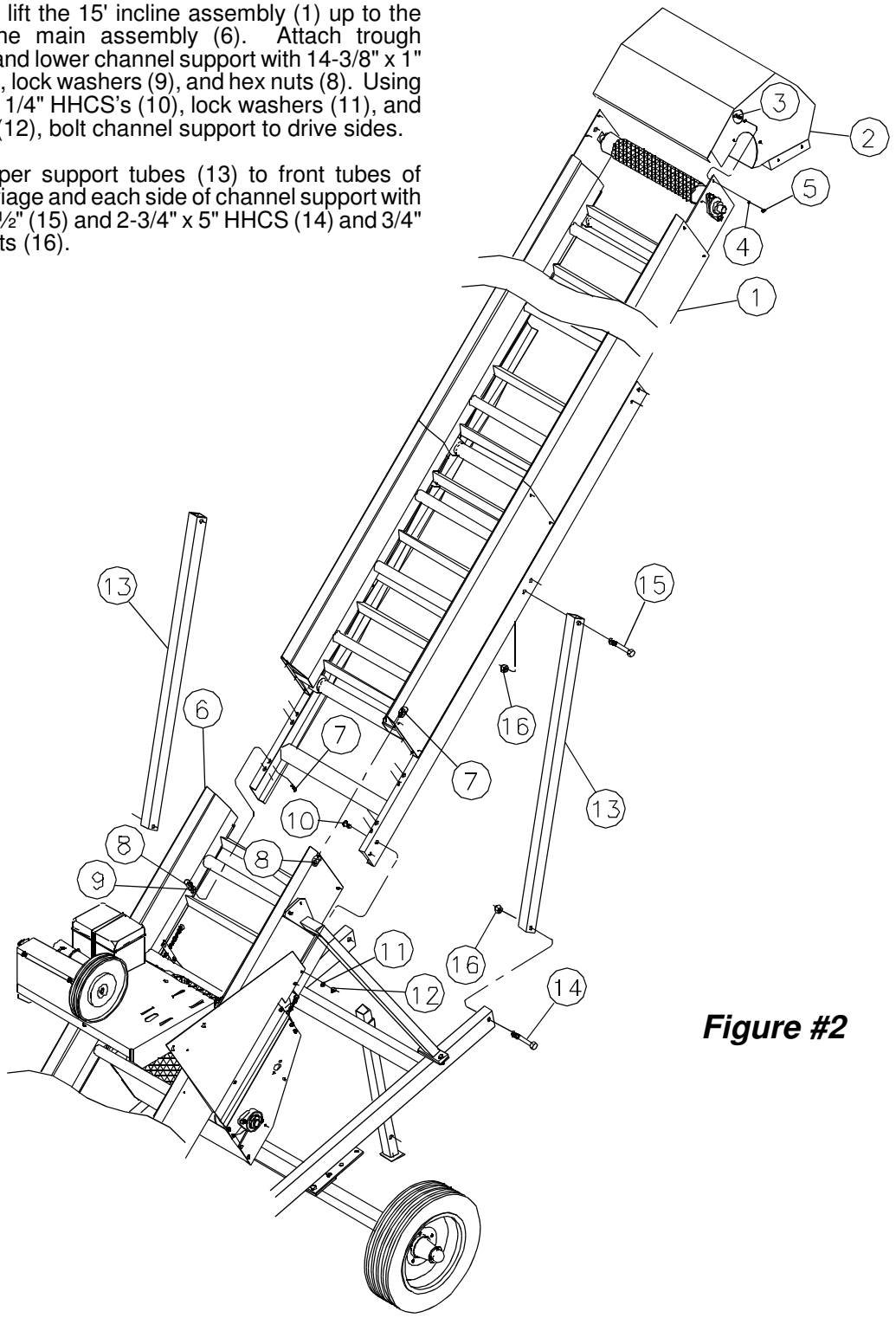

Figure #2

Assembly

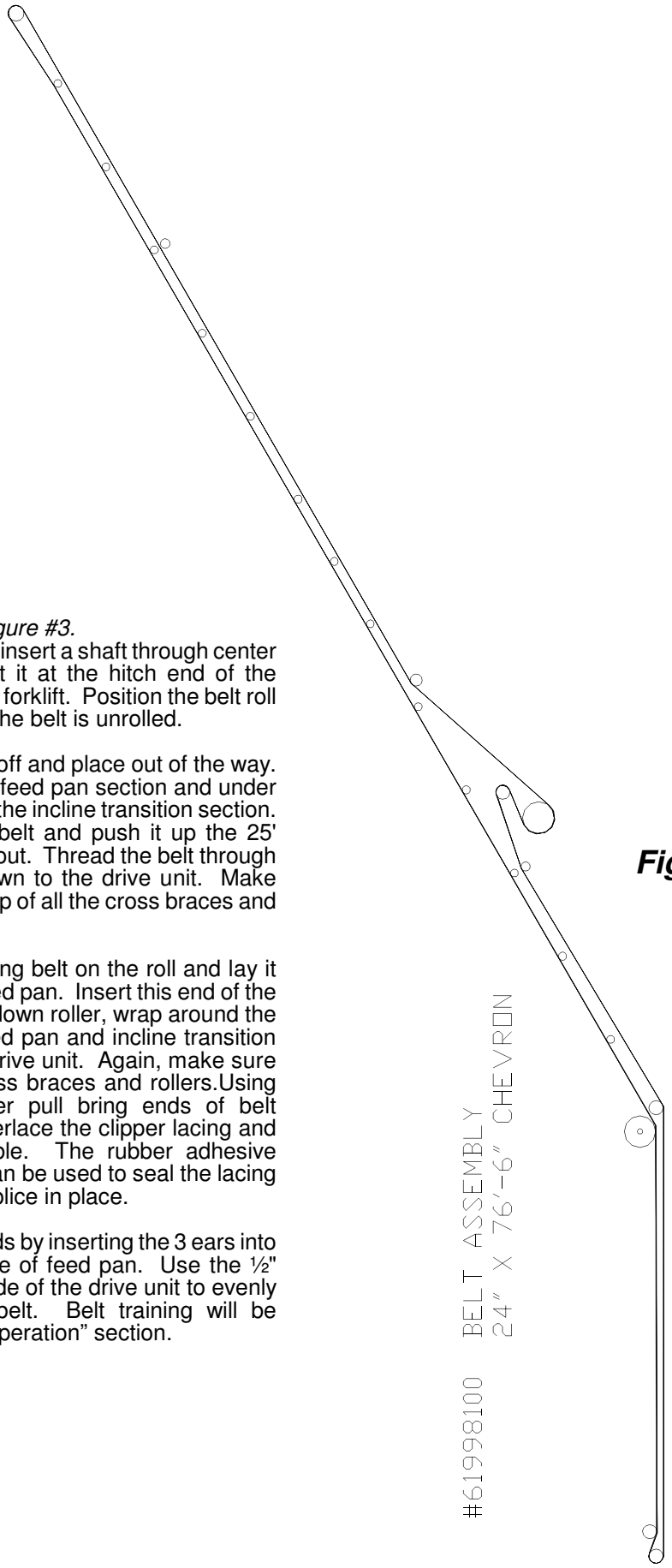

Figure #3

STEP #3. *Refer to Figure #3.*
To install conveyor belt, insert a shaft through center of belt roll and support it at the hitch end of the conveyor with stands or forklift. Position the belt roll so the pattern is up as the belt is unrolled.

Lift the pan sideboards off and place out of the way. Pull the belt across the feed pan section and under the hold down rollers in the incline transition section. Continue to unroll the belt and push it up the 25' incline section to the spout. Thread the belt through the spout and back down to the drive unit. Make sure to put the belt on top of all the cross braces and rollers.

Unroll all of the remaining belt on the roll and lay it back and forth in the feed pan. Insert this end of the belt under the tail hold down roller, wrap around the tail roller, under the feed pan and incline transition roller and through the drive unit. Again, make sure belt is on top of all cross braces and rollers.Using belt clamps and power pull bring ends of belt together. Align and interlace the clipper lacing and secure with splice cable. The rubber adhesive supplied with the belt can be used to seal the lacing and secure the cable splice in place.

Re-install pan sideboards by inserting the 3 ears into the 3 slots on each side of feed pan. Use the ½" take-up bolts in each side of the drive unit to evenly tighten the conveyor belt. Belt training will be addressed in “Before Operation” section.

Assembly

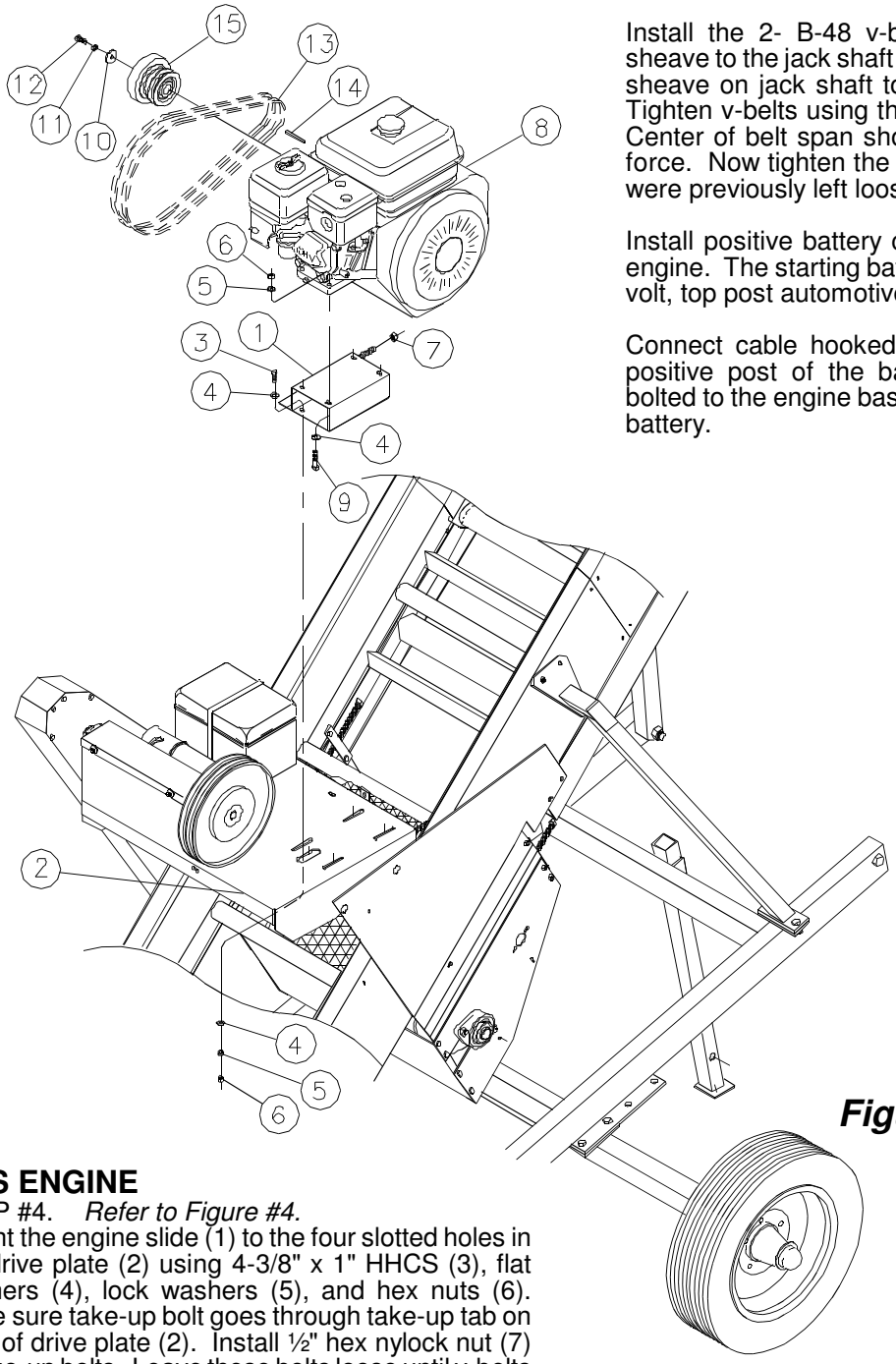

Figure #4

GAS ENGINE

STEP #4. *Refer to Figure #4.*
Mount the engine slide (1) to the four slotted holes in the drive plate (2) using 4-3/8" x 1" HHCS (3), flat washers (4), lock washers (5), and hex nuts (6). Make sure take-up bolt goes through take-up tab on front of drive plate (2). Install ½" hex nylock nut (7) to take-up bolts. Leave these bolts loose until v-belts are installed.

Apply an anti-seize compound to the engine (8) drive shaft. Insert key (14) into keyway and slide centrifugal clutch (15) (sheave side first) onto shaft. Secure clutch to shaft with large 3/8" flat washer (10), lock washer (11), and 3/8" x 1 1/4" fine thread HHCS (12).
Lift engine and clutch assembly onto the already assembled engine slide (1). Attach with 4-3/8" x 1 1/4" HHCS (9), flat washers (4), lock washers (5), and hex nuts (6). Install ground cable to the engine mounting bolt closest to the battery box.

Install the 2- B-48 v-belts (13) from the engine sheave to the jack shaft sheave. Move 12" diameter sheave on jack shaft to align with engine sheave. Tighten v-belts using the engine slide take-up bolt. Center of belt span should deflect 3/16" with 7 lb. force. Now tighten the engine slide bolts (3) which were previously left loose.

Install positive battery cable to the solenoid of the engine. The starting battery is not included. Any 12 volt, top post automotive battery should work.

Connect cable hooked to engine solenoid to the positive post of the battery. Connect the cable bolted to the engine base to the negative post of the battery.

CAUTION:
Engine is shipped **WITHOUT** oil. *Refer to engine operator manual* for lubrication recommendations, operation, service, and maintenance.

Assembly

NOTE: 7.5 HP motor required for normal application.

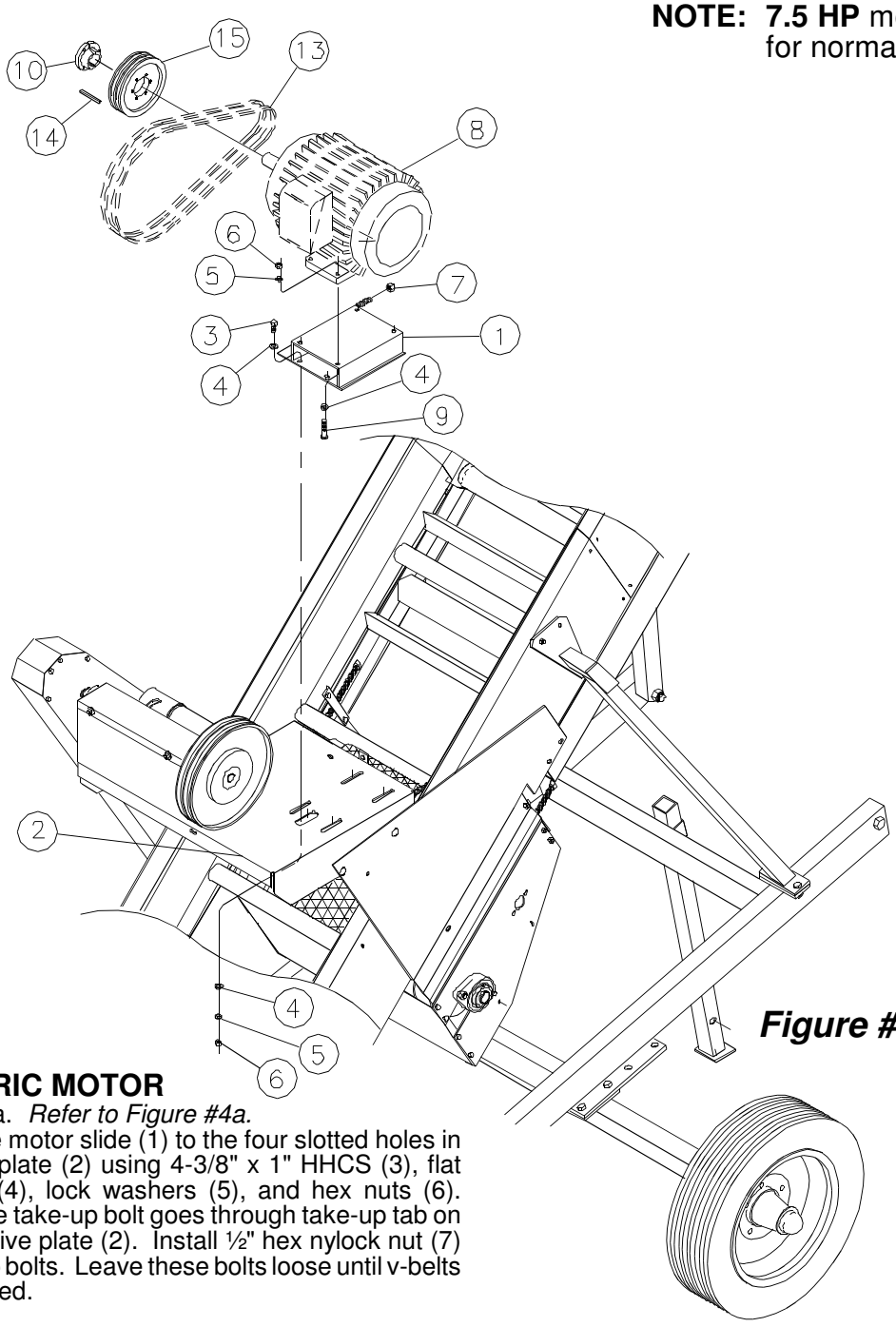

Figure #4a

ELECTRIC MOTOR

STEP #4a. *Refer to Figure #4a.*
Mount the motor slide (1) to the four slotted holes in the drive plate (2) using 4-3/8" x 1" HHCS (3), flat washers (4), lock washers (5), and hex nuts (6). Make sure take-up bolt goes through take-up tab on front of drive plate (2). Install ½" hex nylock nut (7) to take-up bolts. Leave these bolts loose until v-belts are installed.

Mount electric motor (8) to motor slide (1) and attach with 4-3/8" x 1 1/4" HHCS (9), flat washers (4), lock washers (5), and hex nuts (6). Attach bushing (10), key (14), and 6.8 sheave (15). Align sheaves moving 12" sheave on jackshaft if required. Install the 2- B-52 v-belts (13) Tighten v-belts using the motor slide take-up bolt. Center of belt span should deflect 3/16" with 7 lb. force. Now tighten the motor slide bolts (3) which were previously left loose.

Assembly

Figure #5

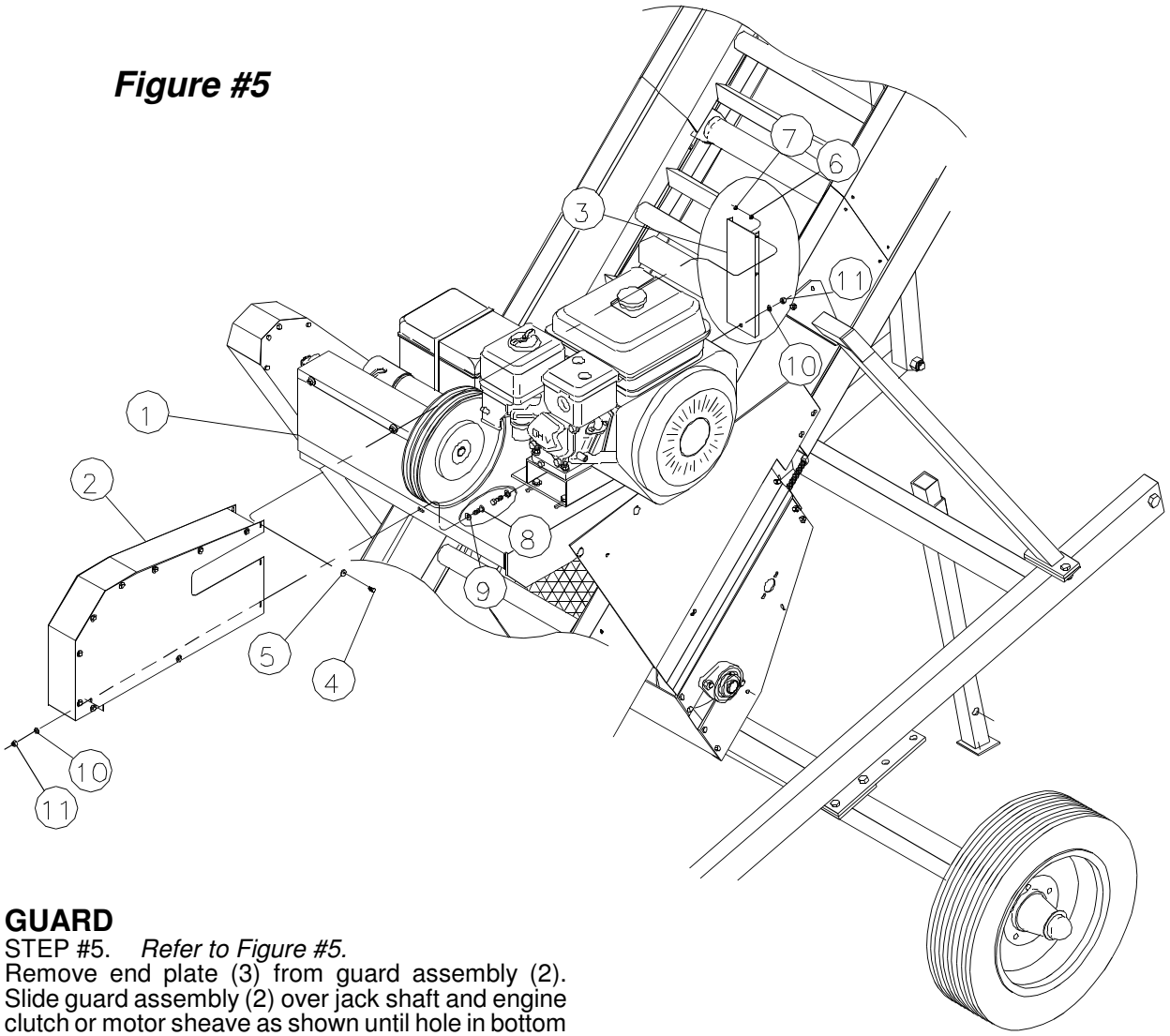

GUARD

STEP #5. *Refer to Figure #5.*
Remove end plate (3) from guard assembly (2). Slide guard assembly (2) over jack shaft and engine clutch or motor sheave as shown until hole in bottom tab of guard (2) aligns with slot in side of drive plate (1). Loosely attach with 5/16" x 1" HHCS (8), flat washer (9), lock washer (10), and hex nut (11).

Re-install end plate (3) with 1/4" bolts (4) and hardware (5,6, & 7) previously removed. Attach bottom of end plate (3) to side of drive plate with 5/16" x 1" HHCS (8), flat washer (9), lock washer (10), and hex nut (11). Position guard for clearance and tighten all mounting bolts.

Before starting engine, review the engine owner's manual for specifices about safety, operation, service, and storage information.

Before Operation

1. GAS: Check engine fluids according to engine manufacturer's owner's manual recommendations.
   ELECTRIC: Check motor, starter, and wiring to be sure they are in good condition.

2. Make sure v-belts are tight. V-belts from jack shaft to drive roller should deflect ½" with 7 pound force applied at center of span.

3. Conveyor belt should be evenly tightened using the two ½" take-up bolts on each side in the front of the drive unit. Measure from the take-up roller to the front of the drive to get the roller square. Before tightening belt, make sure it is centered in the pans and rollers.

   Tension belt until the span of belt entering the drive unit will only deflect 2-3" with a 50 pound force. During operation, the belt should not slip on the drive roller.

4. To align or train conveyor belt, move belt slowly one or two complete revolutions. Check to be sure belt is staying centered on all rollers (tail, transition, drive, and head roller). The belt will move to the loose side. To train the belt to the center of each roller, either tighten the belt on the side you want the belt to move away from, or loosen the side you want the belt to move to.

   Continue to slowly drive and train belt until it runs centered.

5. Make sure all guards are in place. Check general condition of conveyor. Check for damage, excessive debris around moving parts, and loose nuts or bolts.

Operation

1. GAS: Check engine according to engine manufacturer's recommendations before starting.
   ELECTRIC: Check motor, starter, and wiring to be sure they are in good condition.

2. Be sure area around conveyor is clear of obstacles and unauthorized personnel. Chock wheels, lower, and pin support stand located in front of axle. This will prevent nose over when conveying material.

3. GAS: Start engine and allow to idle until warm..

   ELECTRIC: Start motor.

4. GAS: The conveyor is equipped with a centrifugal clutch. Make sure the engine is ran fast enough to insure full clutch engagement. Clutch over-heating will occur if clutch is allowed to slip.

   Increase engine speed with throttle lever to engage clutch and continue to speed up engine until desired belt speed is reached.

5. Load material onto feed pan at a rate the conveyor and engine are comfortable handling. (Approximately 2½ to 3 ton/minute of fertilizer or grain.)

6. GAS: To stop conveyor simply slow engine to idle to disengage centrifugal clutch. Turn off fuel valve before transporting.

Transporting

1. Check general condition of conveyor for loose parts or damage. Check and re-tighten wheel lug nuts. Check tires for proper inflation pressure. Inspect safety chain and coupler.



2. GAS: Make sure engine gas shut off valve is in the OFF position to prevent gasline from leaking into crank case.

   ELECTRIC: Make sure motor and wiring are secure.

3. Remove klik pin and pin from below hitch tube. Lift conveyor to let hitch tube drop down and re-insert pin ABOVE hitch tube. Secure pin with klik pin.

4. Lift conveyor and attach to vehicle towing ball. Use proper ball size. Make certain ball is completely engaged in coupler socket and coupler is locked. Attach safety chain. Allow enough slack for turns.



5. While towing, travel at a safe speed. Watch for overhead obstacles. Avoid sudden maneuvers, turns, or stops. Avoid steep side hills.

6. Reverse above steps to ready conveyor to move material. *Refer to "Operation" section.*

Lubrication

Refer to engine owner's manual for proper lubrication of engine.

Grease conveyor ball bearings with good quality gun grease weekly during season. DO NOT over-grease!

Bearing Location	Quantity	Lubrication Amount
Tail Roller	2	3 pumps
Hold-down Roller	2	2 pumps
Hold-down Wheels	2	3 pumps
Transition Return Roller	2	3 pumps
Jack Shaft	2	2 pumps
Drive Roller	2	3 pumps
Head Roller	2	3 pumps

Storage

During off season or when the conveyor will not be used for several months it should be serviced for storage.

Refer to engine owner's manual for storage recommendations of the engine.

The conveyor should be washed to remove excess debris which could cause corrosion.

All bearings should be greased. *Refer to "Lubrication" section.*

To avoid deterioration from sunlight, the conveyor should be stored inside. Jack and block to remove load from tires. If this is not possible, the belt and tires should be removed and stored in a cool, dry, dark, place.

Undercarriage & Hitch Repair Parts

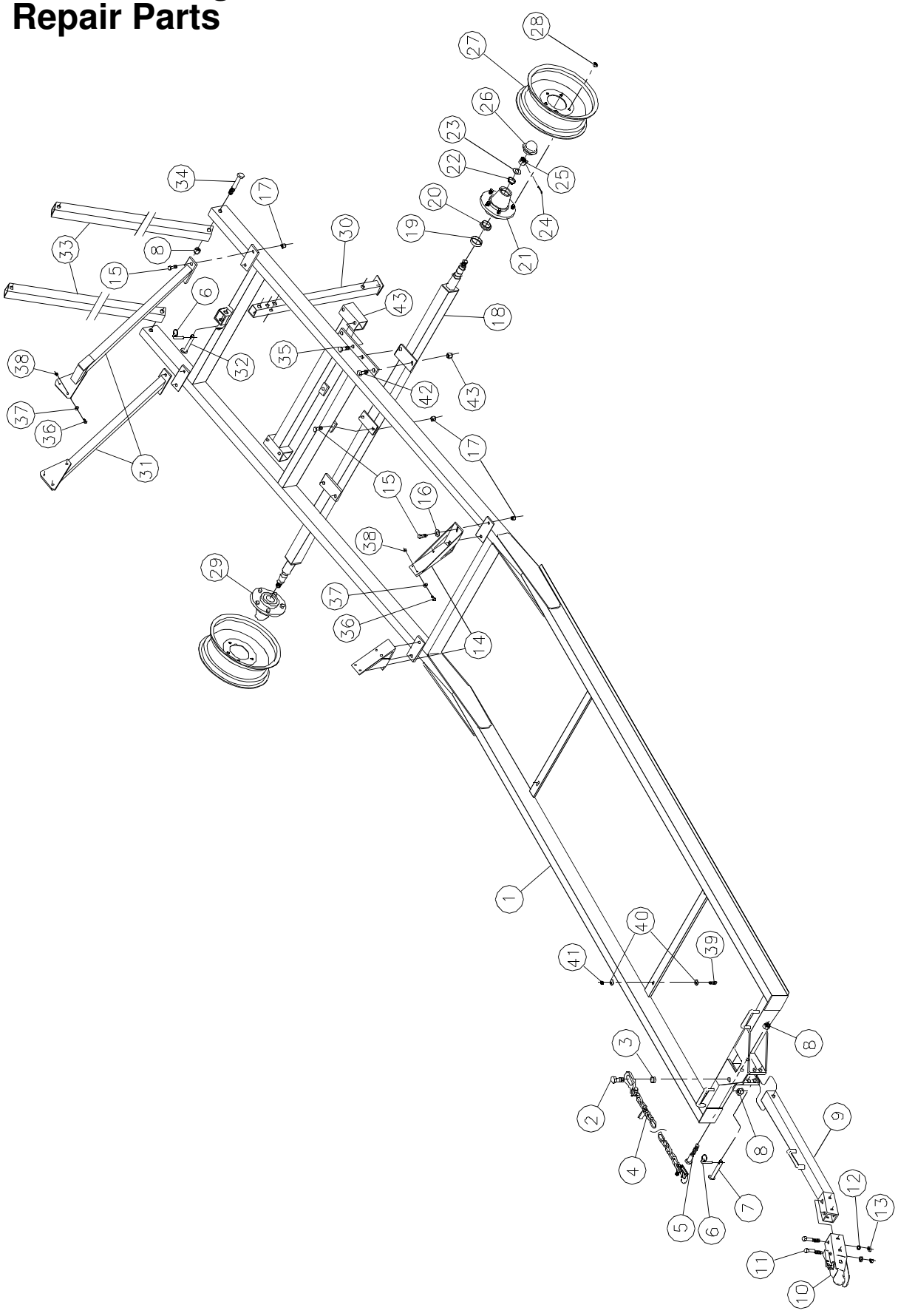

Undercarriage & Hitch Repair Parts

Stainless Steel				Mild Steel		
Item	**Qty**	**Part No.**	**Description**			
1	1	81884900	Undercarriage			
2	1	335125	HHCS 3/4" x 2"			
3	1	156661	Bushing 1 1/8" x 5/8"			
4	1	433938	Safety Chain 11000#			
5	1	330233	HHCS 3/4" x 4 ½"			
6	2	330456	Klik Pin 7/16"			
7	1	331215	Clevis Pin 3/4" x 5 1/4"			
8	4	330316	Hex Nylock Nut 3/4"			
9	1	81907800	Ball Hitch			
10	1	01438100	Coupler			
11	2	334300	HHCS ½" x 3 ½"			
12	2	330142	Lock Washer ½"			
13	2	330134	Hex Nut ½"			
14	2	81917700	Lower Support			
15	10	01147800	HHCS ½" x 1½"			
16	4	330159	Flat Washer ½"			
17	10	331363	Hex Nylock Nut ½"			
18	1	81880700	Axle			
19	2	05702600	Grease Seal			
20	2	03040300	Inner Bearing			
21	2	05707500	Hub 5 Bolt w/cones only			
22	2	05741400	Outer Bearing			
23	2	02080000	Spindle Washer			
24	2	02154300	Cotter Pin 5/32" x 1½"			
25	2	331801	Hub Nut			
26	2	05703400	Dust Cap			
27	2	530238	Wheel 5 Bolt 15 x 6			
28	10	331314	Wheel Nut			
29	2	551242	Hub	(Includes #19-26 & #28)		
30	1	82037300	Undercarriage Support			
31	2	81882300	Center Support			
32	1	330449	Clevis Pin 3/4" x 4½"			
33	2	16544900	Head Support			
34	2	01299700	HHCS 3/4" x 5"			
35	4	331983	HHCS 5/8" x 4"			
36	2	01244300	HHCS 5/16" x 3/4" SS	01144500	HHCS 5/16" x 3/4"	(Mild Steel)
37	2	02218600	Flat Washer 5/16" SS	330852	Flat Washer 5/16"	(Mild Steel)
38	2	03933900	Nylock 5/16" SS	330811	Hex Nut 5/16"	(Mild Steel)
39	4	01025600	HHCS 3/8" x 1 1/4" SS	01017300	HHCS 3/8" x 1"	(Mild Steel)
40	8	02219400	Flat Washer 3/8" SS	330894	Flat Washer 3/8"	(Mild Steel)
41	4	03934700	Nylock 3/8" SS	330837	Hex Nylock Nut 3/8"	(Mild Steel)
42	4	334821	HHCS 5/8" x 1½"			
43	4	01572700	Hex Nylock Nut 5/8"			
44	1	82272600	Axle Spacer (Units with 3' Extensions)			

Pan & Transition
Repair Parts

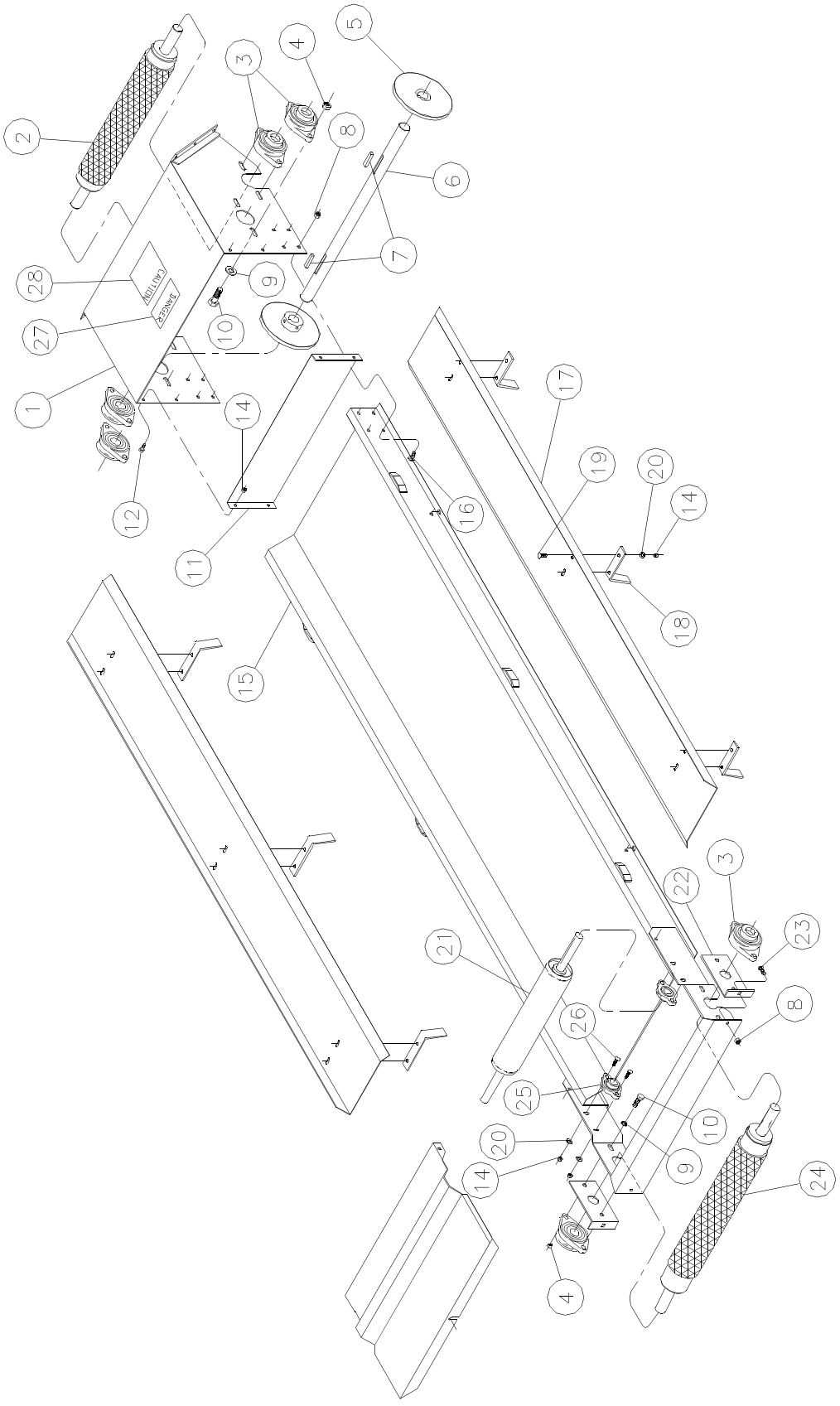

Pan & Transition Repair Parts

Stainless Steel

Item	Qty	Part No.	Description
1	1	81888000	Hold Down Transition
2	1	81623100	Lagged Roller 3½" x 24"
3	6	03018900	Bearing 1 5/16" 2B Flange
4	12	01564400	Hex Nut ½" SS
5	2	81891400	Hold Down Roller
6	1	16693400	Shaft 1 5/16" x 30.11/16"
7	2	10682300	Key 5/16" x 1 1/4"
8	10	03934700	Nylock 3/8" SS
9	12	02221000	Flat Washer ½" SS
10	12	01239300	HHCS ½" x 1½" SS
11	1	16574600	Transition Back Plate
12	4	01244300	HHCS 5/16" x 3/4" SS
13			
14	20	03933900	Nylock 5/16" SS
15	1	81892200	Pan 8' x 24"
16	8	01134600	HHCS 3/8" x 1" SS
17	2	16654600	Pan Hopper
18	6	20061800	Hopper Bracket
19	12	01255900	Carriage Bolt 5/16" x3/4" SS
20	16	02218600	Flat Washer 5/16" SS
21	1	81937500	Roller 3½" 17"
22	2	16545600	Bearing Bracket
23	2	01253400	Carriage Bolt 3/8"x1 1/4" SS
24	1	62372800	Lagged Roller 3½" x 26½"
25	2	03001500	Bearing 1" 2B Flange
26	4	01252600	Carriage Bolt 5/16" x1" SS
27	1	05375100	Danger
28	1	05373600	Decal Caution

Mild Steel

Item	Qty	Part No.	Description
1	1	82066200	Hold Down Transition
2	1	81623100	Lagged Roller 3½" x 24"
3	6	03018900	Bearing 1 5/16" 2B Flange
4	12	330134	Hex Nut ½"
5	2	81891400	Hold Down Roller
6	1	16693400	Shaft 1 5/16" x 30.11/16"
7	2	10682300	Key 5/16" x 1 1/4"
8	10	330035	Hex Nut 3/8"
9	12	330159	Flat Washer ½"
10	12	01147800	HHCS ½" x 1½"
11	1	17169400	Transition Back Plate
12	4	01144500	HHCS 5/16" x 3/4"
13	4	330845	Lock Washer 5/16"
14	20	330811	Hex Nut 5/16"
15	1	82067000	Pan 8' x 24"
16	8	01017300	HHCS 3/8" x 1"
17	2	17177700	Pan Hopper
18	6	17178500	Hopper Bracket
19	12	334409	Carriage Bolt 5/16" x 3/4"
20	16	330852	Flat Washer 5/16"
21	1	81937500	Roller 3½" 17"
22	2	17179300	Bearing Bracket
23	2	335919	Carriage Bolt 3/8" x1 1/4"
24	1	62372800	Lagged Roller 3½" x 26½"
25	2	03001500	Bearing 1" 2B Flange
26	4	01047000	Carriage Bolt 5/16" x1"
27	1	05375100	Danger
28	1	05373600	Decal Caution

Drive Repair Parts

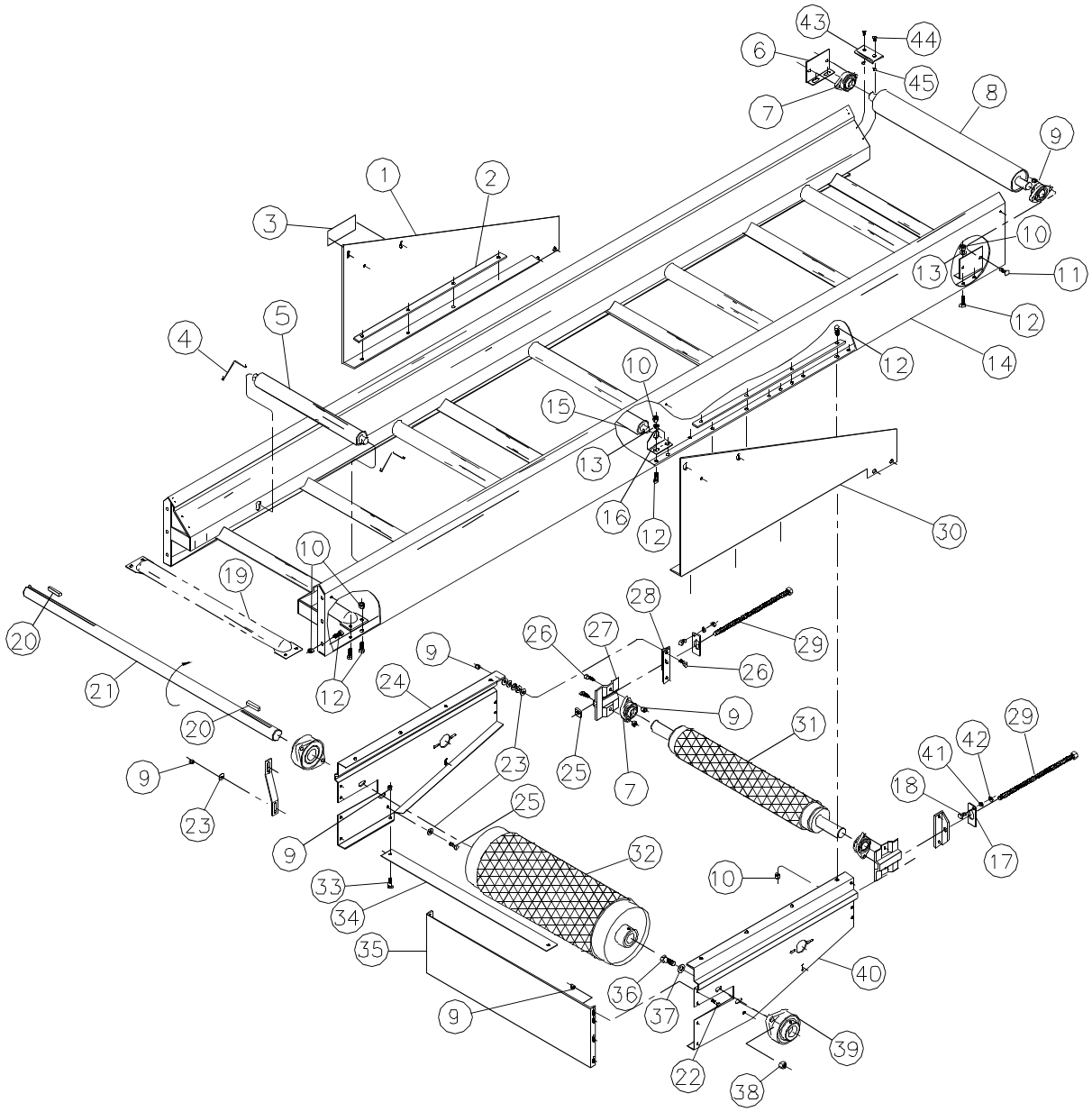

Drive Repair Parts

Stainless Steel

Item	Qty	Part No.	Description
1	1	18907600	Drive Mount Plate Left
2	2	12639100	Drive Mount Strap
3	1	05316500	Decal Turn Fuel Off
4	10	06874200	Roller Clip 1/16" x 4 3/8" SS
5	5	60192200	Roller Assembly 2" x 18"
6	2	19711100	Roller Bracket
7	4	03001500	Bearing 1" 2B flange
8	1	80014400	Roller 3" x 24 ½"
9	24	03933900	Nylock 5/16" SS
10	26	03934700	Nylock 3/8" SS
11	4	01252600	Carriage Bolt 5/16" x 1" SS
12	26	01134600	HHCS 3/8" x 1" SS
13	8	02219400	Flat Washer 3/8" SS
14	1	83932400	Pan 10' x 24"
15	1	60195500	Roller Assembly 2 3/8" x 24"
16	2	13019500	Return Roller Bracket
17	2	14812200	Lock Plate
18	2	02226900	HHCS 1/4" x 3/4" SS
19	1	18631200	Spreader
20	2	10682300	Key 5/16" x 1 1/4"
21	1	18636100	Shaft 1 5/16" x 35½"
22	8	01037100	HHCS 5/16" x 1 1/4" SS
23	33	02218600	Flat Washer 5/16" SS
24	1	15315500	Drive Unit Side Left
25	2	01561000	Square Nut ½" SS
26	11	01210400	HHCS 5/16" x 1" SS
27	2	81610800	Bearing Slide
28	2	10330900	Take-up Bearing Bracket
29	2	83106500	Take-up Bolt ½" x 14" SS
30	1	18906800	Drive Mount Plate Right
31	1	60391000	Lagged Roller 3½" x 24½"
32	1	60453800	Lagged Roller 8" x 24½" 1 5/16" B
33	2	01244300	HHCS 5/16" x 3/4" SS
34	1	19703800	Drive Unit Support
35	1	19704600	Drive Unit Back Plate
36	4	01239300	HHCS ½" x 1 ½" SS
37	4	02221000	Flat Washer ½" SS
38	4	01564400	Hex Nut ½" SS
39	2	03018900	Bearing 1 5/16" 2B flange
40	1	15314800	Drive Unit Side Right
41	2	337550	Lock Washer 1/4" SS
42	2	01507300	Hex Nut 1/4" SS
43	2	16116600	Wear Plate
44	4	01409200	Screw #10-24 x ½"
45	4	01052000	Hex Nut #10-24

Mild Steel

Item	Qty	Part No.	Description
1	1	17158700	Drive Mount Plate Left
2	2	17160300	Drive Mount Strap
3	1	05316500	Decal Turn Fuel Off
4	10	06874200	Roller Clip 1/16" x 4 3/8"
5	5	60192200	Roller Assembly 2" x 18"
6	2	17157900	Roller Bracket
7	4	03001500	Bearing 1" 2B flange
8	1	80014400	Roller 3" x 24 ½"
9	24	330811	Hex Nut 5/16"
10	26	330035	Hex Nut 3/8"
11	4	01047000	Carriage Bolt 5/16" x 1"
12	26	01017300	HHCS 3/8" x 1"
13	8	330894	Flat Washer 3/8"
14	1	82050600	Pan 10' x 24"
15	1	60195500	Roller Assembly 2 3/8" x 24"
16	2	13019500	Return Roller Bracket
17	2	14812200	Lock Plate
18	2	01057900	HHCS 1/4" x 3/4"
19	1	17140500	Spreader
20	2	10682300	Key 5/16" x 1 1/4"
21	1	18636100	Shaft 1 5/16" x 35½"
22	3	330845	Lock Washer 5/16"
23	33	330852	Flat Washer 5/16"
24	1	17154600	Drive Unit Side Left
25	2	332197	Square Nut ½"
26	11	01010800	HHCS 5/16" x 1"
27	2	81610800	Bearing Slide
28	2	17168600	Take-up Bearing Bracket
29	2	80886500	Take-up Bolt ½" x 14"
30	1	17159500	Drive Mount Plate Right
31	1	60391000	Lagged Roller 3½" x 24½"
32	1	60453800	Lagged Roller 8" x 24½" 1 5/16" B
33	9	01144500	HHCS 5/16" x 3/4"
34	1	17153800	Drive Unit Support
35	1	17156100	Drive Unit Back Plate
36	4	01147800	HHCS ½" x 1 ½"
37	4	330159	Flat Washer ½"
38	4	330134	Hex Nut ½"
39	2	03018900	Bearing 1 5/16" 2B flange
40	1	17155300	Drive Unit Side Right
41	2	330050	Lock Washer 1/4"
42	2	332205	Hex Nut 1/4"
43	2	17719600	Wear Plate
44	4	01409200	Screw #10-24 x ½"
45	4	01052000	Hex Nut #10-24

Gas Drive
Repair Parts

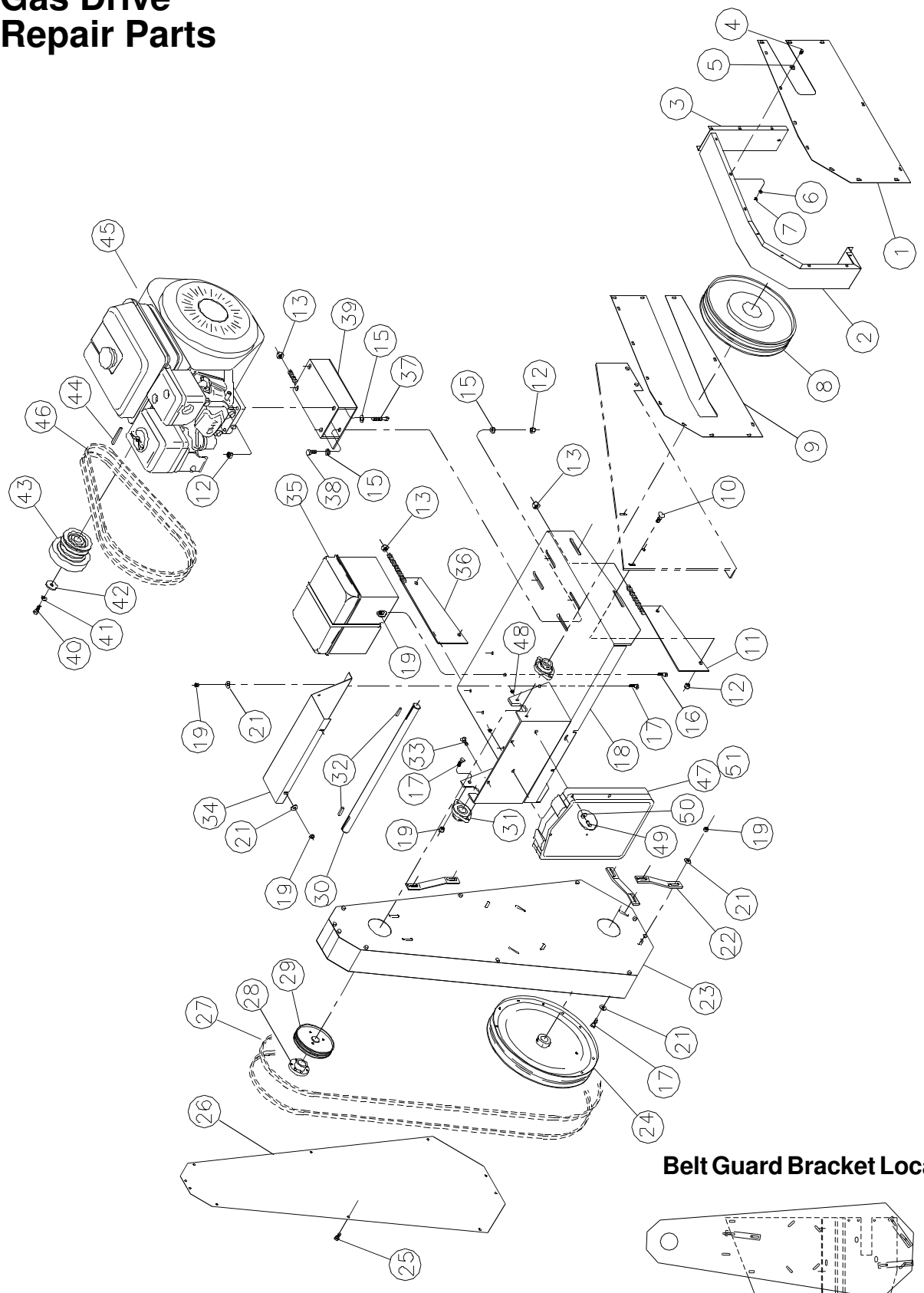

Belt Guard Bracket Locations

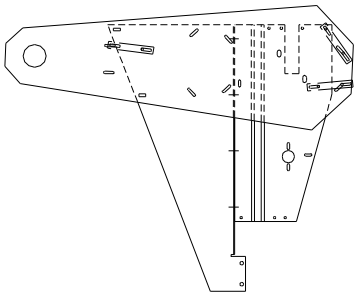

Gas Drive
Repair Parts

Stainless Steel

Item	Qty	Part No.	Description
1	1	17104100	Guard Front Plate SS
2	1	16564700	Guard Side Plate SS
3	1	16604100	Guard End Plate SS
4	22	01245000	HHCS 1/4" x ½" SS
5	22	02217800	Flat Washer 1/4" SS
6	22	337550	Lock Washer 1/4" SS
7	22	01507300	Hex Nut 1/4" SS
8	1	04259800	Sheave 2B 12.0 x 1"
9	1	17103300	Guard Back Plate SS
10	4	01253400	Carriage Bolt 3/8" x1 1/4"SS
11	1	81838500	Motor Mount Adjuster Right
12	12	03934700	Nylock 3/8" SS
13	2	331363	Hex Nylock Nut ½"
14			
15	12	02219400	Flat Washer 3/8" SS
16	2	01244300	HHCS 5/16" x 3/4" SS
17	9	01210400	HHCS 5/16" x 1" SS
18	1	81898900	Engine Mount
19	15	03933900	Nylock 5/16" SS
20			
21	10	02218600	Flat Washer 5/16" SS
22	3	16801300	Guard Bracket
23	1	61588000	Belt Guard Assembly
		Includes:	
	1	14787600	Front Plate
	2	14788400	Side Plate
24	1	04275400	Sheave 2B 15.0 x 1 5/16"
25	10	01200500	Screw 5/16" x 3/4" Self-tap
26	1	14786800	Belt Guard Back Plate
27	2	03244100	V-Belt B-101
28	1	04264800	Bushing 1" SDS
29	1	04456000	Sheave 2B 4.6 SDS
30	1	16583700	Shaft 1" x 23"
31	2	03001500	Bearing 1" 2 bolt flange
32	2	10490100	Key 1/4" x 1 1/4"
33	2	01252600	Carriage Bolt 5/16" x 1" SS
34	1	17073800	Shaft Guard
35	1	01429000	Battery Box
	1	03241700	Battery Top Post x 30
	1	03242500	Battery Top Post x 20
36	1	81839300	Motor Mount Adjuster Left
37	4	01234400	HHCS 3/8" x 1 3/4" SS
38	4	01134600	HHCS 3/8" x 1" SS
39	1	81897100	Engine Slide
40	1	01915800	HHCS 3/8" x 1 1/4" SAE
41	1	330043	Lock Washer 3/8"
42	1	16623100	Washer 3/16" x 1½" SS
43	1	03239100	Clutch 12-16 Hp 1" bore
44	1	16642100	Key 1/4" x 2 7/8"
45	1	03162500	Engine 13 Hp Honda
46	2	03571700	V-Belt B-48
47	1	607416	Manual Holder
48	4	330522	Nylock 1/4"
49	4	02226900	HHCS 1/4" x 3/4" SS
50	4	02217800	Flat Washer 1/4" SS
51	1	03240900	Owners Manual

Mild Steel

Item	Qty	Part No.	Description
1	1	17148800	Guard Front Plate MS
2	1	17150400	Guard Side Plate MS
3	1	17188400	Guard End Plate MS
4	22	01150200	HHCS 1/4" x ½"
5	22	02016400	Flat Washer 1/4"
6	22	330050	Lock Washer 1/4"
7	22	332205	Hex Nut 1/4"
8	1	04259800	Sheave 2B 12.0 x 1"
9	1	17149600	Guard Back Plate MS
10	4	335919	Carriage Bolt 3/8" x 1 1/4"
11	1	82061300	Motor Mount Adjuster Right
12	12	330035	Hex Nut 3/8"
13	2	331363	Hex Nylock Nut ½"
14	8	330043	Lock Washer 3/8"
15	12	330894	Flat Washer 3/8"
16	4	01144500	HHCS 5/16" x 3/4"
17	9	01010800	HHCS 5/16" x 1"
18	1	82063900	Engine Mount
19	15	330811	Hex Nut 5/16"
20	7	330845	Lock Washer 5/16"
21	10	330852	Flat Washer 5/16"
22	3	12176400	Guard Bracket
23	1	61585600	Belt Guard Assembly
		Includes:	
	1	14774400	Front Plate
	2	14773600	Side Plate
24	1	04275400	Sheave 2B 15.0 x 1 5/16"
25	10	01200500	Screw 5/16" x 3/4" Self-tap
26	1	14775100	Belt Guard Back Plate
27	2	03244100	V-Belt B-101
28	1	04264800	Bushing 1" SDS
29	1	04456000	Sheave 2B 4.6 SDS
30	1	16583700	Shaft 1" x 23"
31	2	03001500	Bearing 1" 2 bolt flange
32	2	10490100	Key 1/4" x 1 1/4"
33	2	01047000	Carriage Bolt 5/16" x 1"
34	1	17163700	Shaft Guard
35	1	01429000	Battery Box
	1	03241700	Battery Top Post x 30
	1	03242500	Battery Top Post x 20
36	1	82060500	Motor Mount Adjuster Left
37	4	335877	HHCS 3/8" x 1 3/4"
38	4	01017300	HHCS 3/8" x 1"
39	1	82054800	Engine Slide
40	1	01915800	HHCS 3/8" x 1 1/4" SAE
41	1	330043	Lock Washer 3/8"
42	1	16623100	Washer 3/16" x 1½"
43	1	03239100	Clutch 12-16 Hp 1" bore
44	1	16642100	Key 1/4" x 2 7/8"
45	1	03162500	Engine 13 Hp Honda
46	2	03571700	V-Belt B-48
47	1	607416	Manual Holder
48	4	330522	Nylock 1/4"
49	4	01057900	HHCS 1/4" x 3/4"
50	4	02216400	Flat Washer 1/4"
51	1	03240900	Owners Manual

Electric Drive
Repair Parts

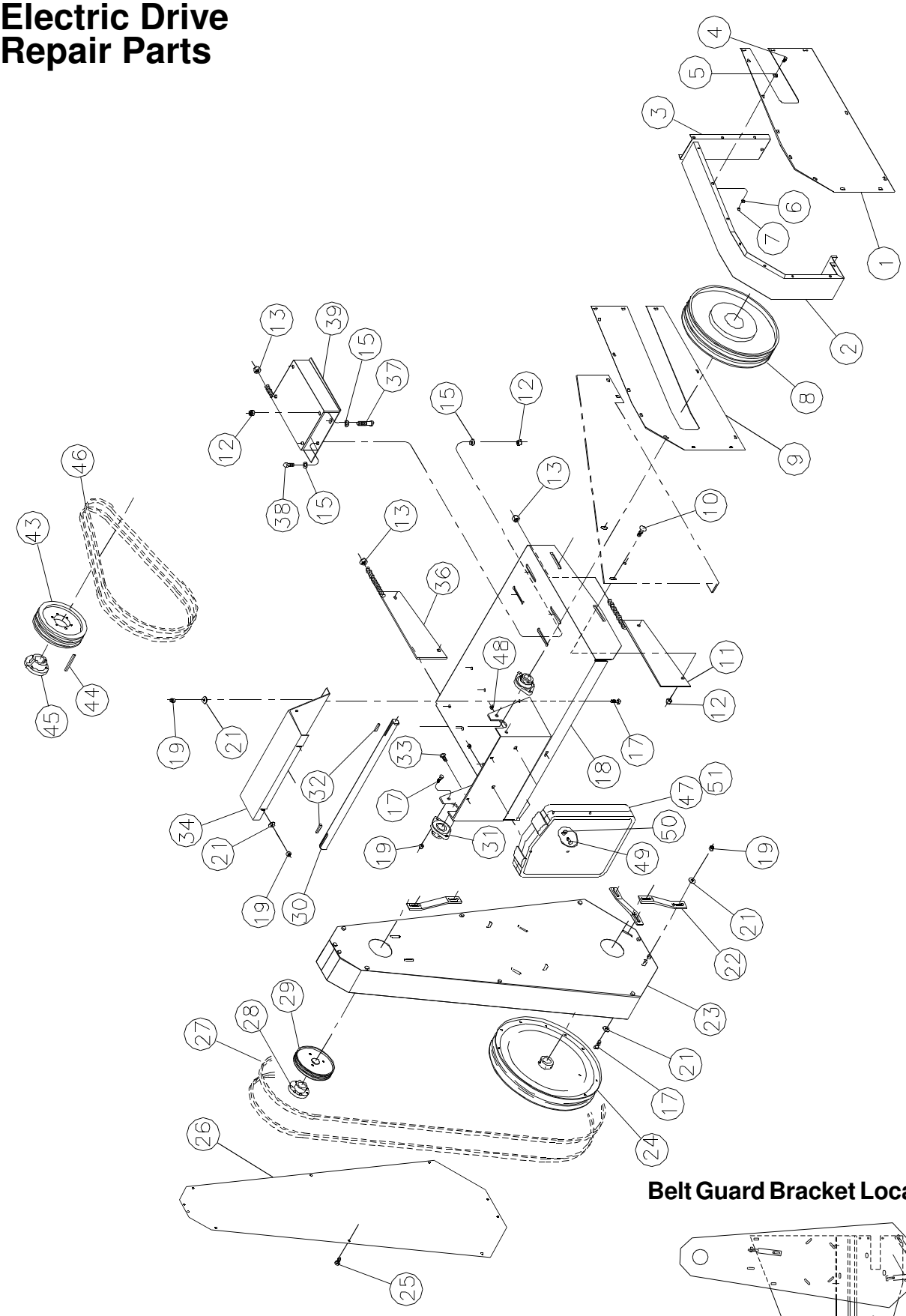

Belt Guard Bracket Locations

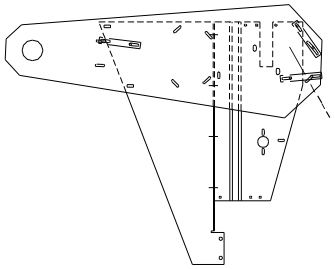

Electric Drive
Repair Parts

Stainless Steel

Item	Qty	Part No.	Description
1	1	17104100	Guard Front Plate SS
2	1	16564700	Guard Side Plate SS
3	1	16604100	Guard End Plate SS
4	22	01245000	HHCS 1/4" x ½" SS
5	22	02217800	Flat Washer 1/4" SS
6	22	337550	Lock Washer 1/4" SS
7	22	01507300	Hex Nut 1/4" SS
8	1	04259800	Sheave 2B 12.0 x 1"
9	1	17103300	Guard Back Plate SS
10	4	01253400	Carriage Bolt 3/8" x1 1/4"SS
11	1	81838500	Motor Mount Adjuster Right
12	12	03934700	Nylock 3/8" SS
13	2	331363	Hex Nylock Nut ½"
14			
15	12	02219400	Flat Washer 3/8" SS
16	2	01244300	HHCS 5/16" x 3/4" SS
17	9	01210400	HHCS 5/16" x 1" SS
18	1	81898900	Motor Mount
19	15	03933900	Nylock 5/16" SS
20			
21	10	02218600	Flat Washer 5/16" SS
22	3	16801300	Guard Bracket
23	1	61588000	Belt Guard Assembly
		Includes:	
	1	14787600	Front Plate
	2	14788400	Side Plate
24	1	04275400	Sheave 2B 15.0 x 1 5/16"
25	10	01200500	Screw 5/16" x 3/4" Self-tap
26	1	14786800	Belt Guard Back Plate
27	2	03244100	V-Belt B-101
28	1	04264800	Bushing 1" SDS
29	1	04456000	Sheave 2B 4.6 SDS
30	1	16583700	Shaft 1" x 23"
31	2	03001500	Bearing 1" 2 bolt flange
32	2	10490100	Key 1/4" x 1 1/4"
33	2	01252600	Carriage Bolt 5/16" x 1" SS
34	1	17073800	Shaft Guard
35			
36	1	81839300	Motor Mount Adjuster Left
37	4	01234400	HHCS 3/8" x 1 3/4" SS
38	4	01134600	HHCS 3/8" x 1" SS
39	1	82100900	Motor Slide Electric
40			
41			
42			
43	1	04303400	Sheave 2B 6.8 SDS
44	1	16642100	Key 1/4" x 2 7/8"
45	1	04348900	Bushing 1 3/8" SDS
46	2	03209400	V-Belt B-52
47	1	607416	Manual Holder
48	4	330522	Nylock 1/4"
49	4	02226900	HHCS 1/4" x 3/4" SS
50	4	02217800	Flat Washer 1/4" SS
51	1	03240900	Owners Manual

Mild Steel

Item	Qty	Part No.	Description
1	1	17148800	Guard Front Plate MS
2	1	17150400	Guard Side Plate MS
3	1	17188400	Guard End Plate MS
4	22	01150200	HHCS 1/4" x ½"
5	22	02016400	Flat Washer 1/4"
6	22	330050	Lock Washer 1/4"
7	22	332205	Hex Nut 1/4"
8	1	04259800	Sheave 2B 12.0 x 1"
9	1	17149600	Guard Back Plate MS
10	4	335919	Carriage Bolt 3/8" x 1 1/4"
11	1	82061300	Motor Mount Adjuster Right
12	12	330035	Hex Nut 3/8"
13	2	331363	Hex Nylock Nut ½"
14	8	330043	Lock Washer 3/8"
15	12	330894	Flat Washer 3/8"
16	4	01144500	HHCS 5/16" x 3/4"
17	9	01010800	HHCS 5/16" x 1"
18	1	82063900	Motor Mount
19	15	330811	Hex Nut 5/16"
20	7	330845	Lock Washer 5/16"
21	10	330852	Flat Washer 5/16"
22	3	12176400	Guard Bracket
23	1	61585600	Belt Guard Assembly
		Includes:	
	1	14774400	Front Plate
	2	14773600	Side Plate
24	1	04275400	Sheave 2B 15.0 x 1 5/16"
25	10	01200500	Screw 5/16" x 3/4" Self-tap
26	1	14775100	Belt Guard Back Plate
27	2	03244100	V-Belt B-101
28	1	04264800	Bushing 1" SDS
29	1	04456000	Sheave 2B 4.6 SDS
30	1	16583700	Shaft 1" x 23"
31	2	03001500	Bearing 1" 2 bolt flange
32	2	10490100	Key 1/4" x 1 1/4"
33	2	01047000	Carriage Bolt 5/16" x 1"
34	1	17163700	Shaft Guard
35			
36	1	82060500	Motor Mount Adjuster Left
37	4	335877	HHCS 3/8" x 1 3/4"
38	4	01017300	HHCS 3/8" x 1"
39	1	82100900	Motor Slide Electric
40			
41			
42			
43	1	04303400	Sheave 2B 6.8 SDS
44	1	16642100	Key 1/4" x 2 7/8"
45	1	04348900	Bushing 1 3/8" SDS
46	2	03209400	V-Belt B-52
47	1	607416	Manual Holder
48	4	330522	Nylock 1/4"
49	4	01057900	HHCS 1/4" x 3/4"
50	4	02216400	Flat Washer 1/4"
51	1	03240900	Owners Manual

Pan
Repair Parts

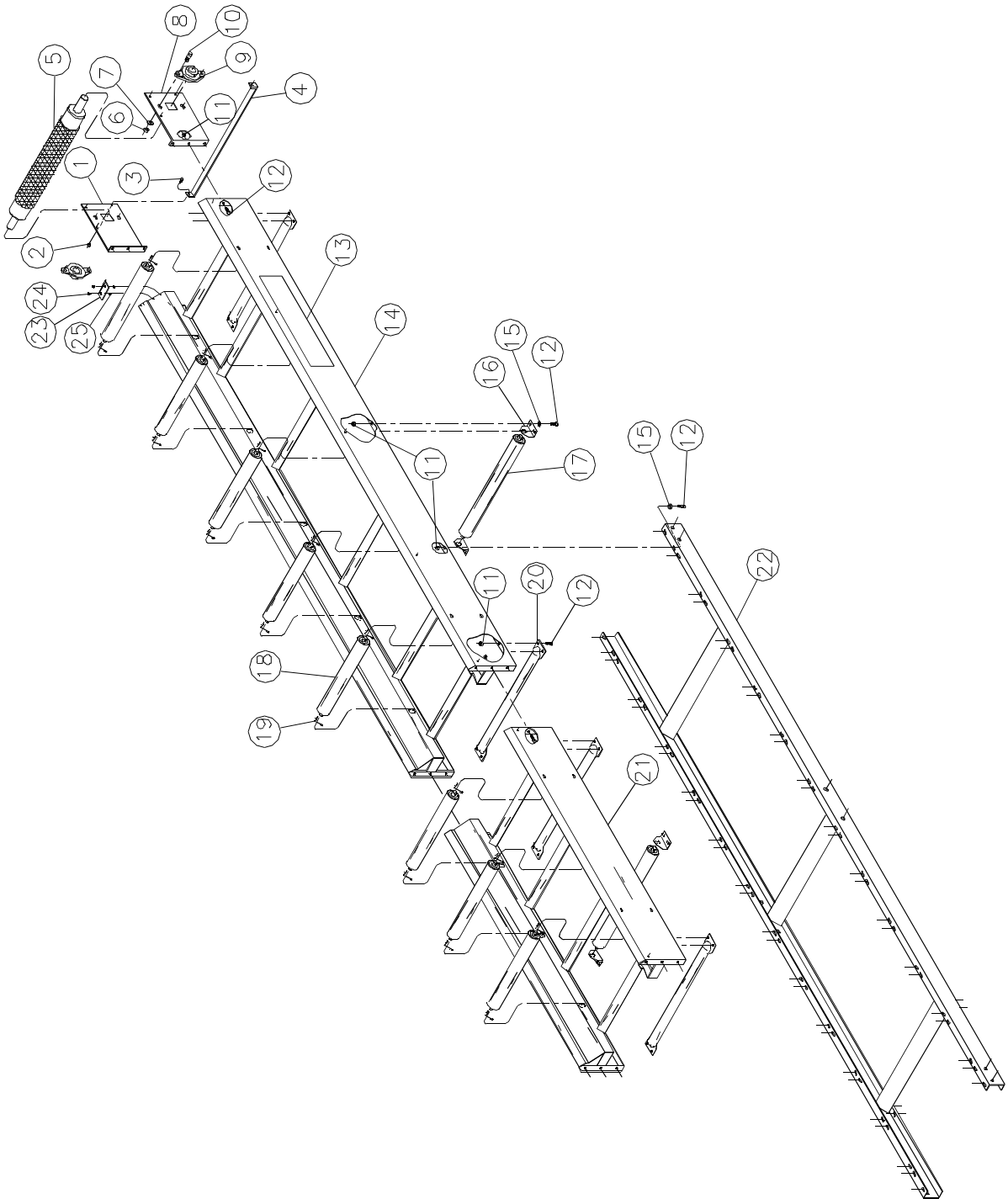

Pan
Repair Parts

Stainless Steel

Item	Qty	Part No.	Description
1	1	16028300	Head Plate RH
2	2	03933900	Nylock 5/16" SS
3	2	01244300	HHCS 5/16" x 3/4" SS
4	1	19708700	Head Frame Support
5	1	60355500	Lagged Roller 3½" x 27"
6	4	01564400	Hex Nut ½" SS
7	4	02221000	Flat Washer ½" SS
8	1	16027500	Head Plate LH
9	2	03018900	Bearing 1 5/16" 2B
10	4	01239300	HHCS ½" x 1½" SS
11	58	03934700	Nylock 3/8" SS
12	58	01134600	HHCS 3/8" x 1" SS
13	2	01114800	Decal Speed King
14	1	83932400	Pan 10' x 24"
15	46	02219400	Flat Washer 3/8" SS
16	4	13019500	Return Roller Bracket
17	2	60195500	Roller 2 3/8" x 24"
18	8	60192200	Roller 2" x 18"
19	16	06874200	Roller Clip
20	4	18631200	Spreader 24"
21	1	83933200	Pan 5' x 24"
22	1	81887200	Head Support
23	2	16116600	Wear Plate
24	4	01409200	Screw #10-24 x ½"
25	4	01052000	Hex Nut #10-24

Mild Steel

Item	Qty	Part No.	Description
1	1	17136300	Head Plate RH
2	2	330811	Hex Nut 5/16"
3	2	01144500	HHCS 5/16" x 3/4"
4	1	17137100	Head Frame Support
5	1	60355500	Lagged Roller 3½" x 27"
6	4	330134	Hex Nut ½"
7	4	330159	Flat Washer ½"
8	1	17135500	Head Plate LH
9	2	03018900	Bearing 1 5/16" 2B
10	4	01147800	HHCS ½" x 1½"
11	58	330035	Hex Nut 3/8"
12	58	01017300	HHCS 3/8" x 1"
13	2	01114800	Decal Speed King
14	1	82050600	Pan 10' x 24"
15	46	330894	Flat Washer 3/8"
16	4	13019500	Return Roller Bracket
17	2	60195500	Roller 2 3/8" x 24"
18	8	60192200	Roller 2" x 18"
19	16	06874200	Roller Clip
20	4	17140500	Spreader 24"
21	1	82049800	Pan 5' x 24"
22	1	81887200	Head Support
23	2	17719600	Wear Plate
24	4	01409200	Screw #10-24 x ½"
25	4	01052000	Hex Nut #10-24

Spout

#61514600 - 24" Mild Steel Spout

#62355300 - 24" Stainless Steel Spout

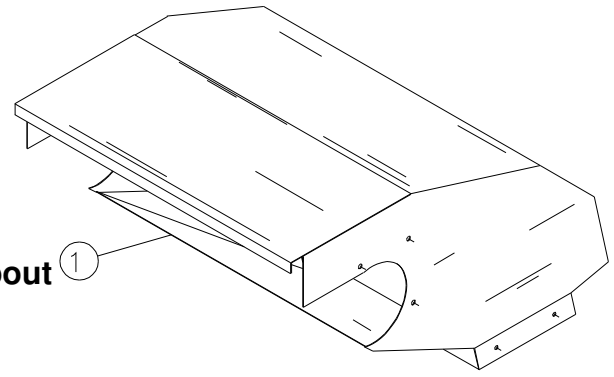

3' Extension
Repair Parts

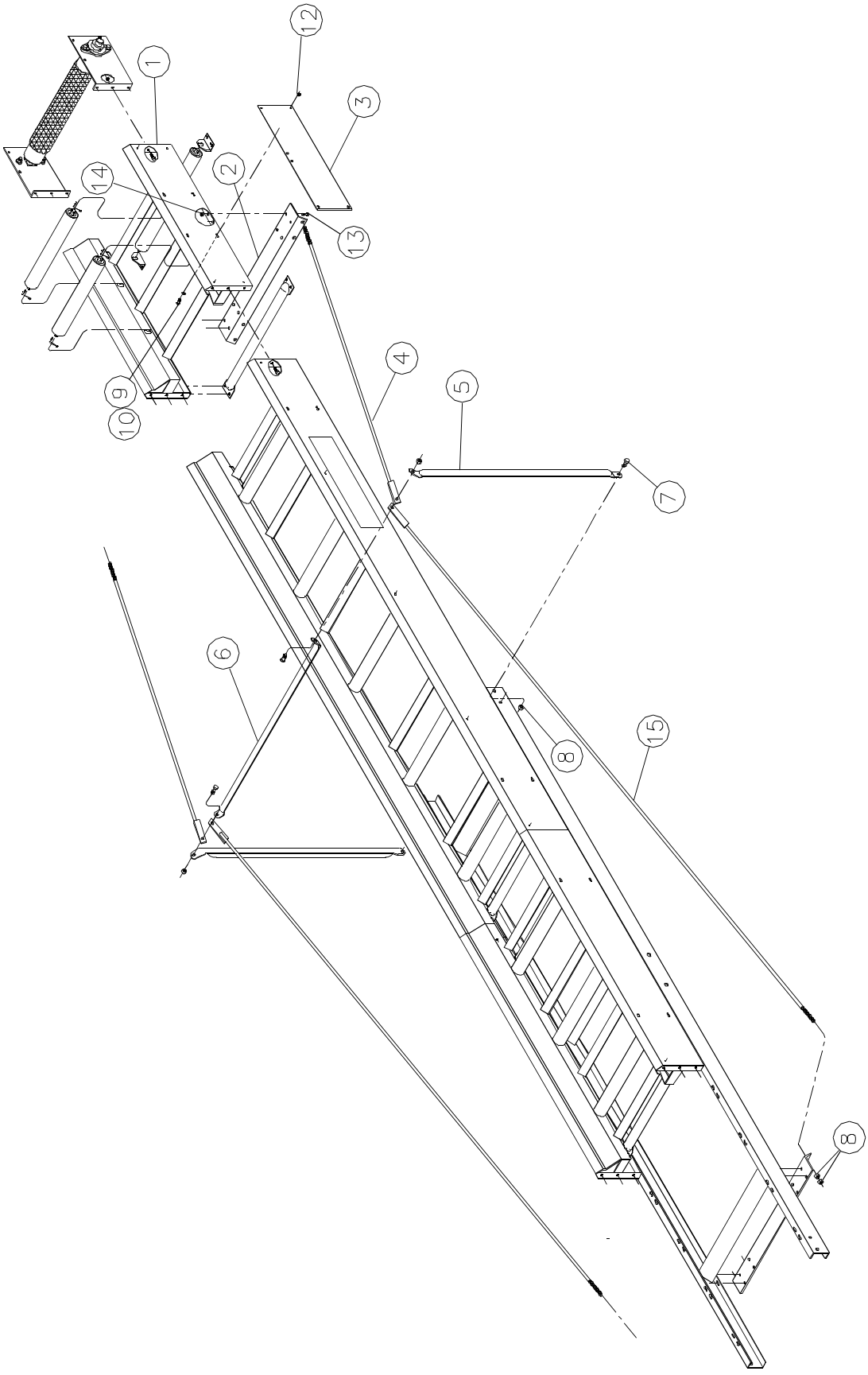

3' Extension
Repair Parts

Stainless Steel

Item	Qty	Part No.	Description
1	1	61154100	Pan Assembly 3' x 24" SS
2	2	18916700	Truss Support
3	2	17622200	Splice Plate
4	2	81262800	Truss Rod 7'
5	2	19526300	Truss Stand Off
6	1	19527100	Truss Bridge
7	4	01260900	HHCS ½" x 1 1/4" SS
8	12	01564400	Hex Nut ½" SS
9	8	01210400	HHCS 5/16" x 1" SS
10	8	02218600	Flat Washer 5/16" SS
11			
12	8	03933900	Nylock 5/16" SS
13	4	01134600	HHCS 3/8" x 1" SS
14	4	03934700	Nylock 3/8" SS
15	2	81028300	Truss Rod 10'

Mild Steel

Item	Qty	Part No.	Description
1	1	62583000	Pan Assembly 3' x 24" MS
2	2	18916700	Truss Support
3	2	17623000	Splice Plate
4	2	81262800	Truss Rod 7'
5	2	19526300	Truss Stand Off
6	1	19527100	Truss Bridge
7	4	01180900	HHCS ½" x 1 1/4"
8	12	330134	Hex Nut ½"
9	8	01010800	HHCS 5/16" x 1"
10	8	330852	Flat Washer 5/16"
11	8	330845	Lock Washer 5/16"
12	8	330811	Hex Nut 5/16"
13	4	01017300	HHCS 3/8" x 1"
14	4	330035	Hex Nut 3/8"
15	2	81028300	Truss Rod 10'

CrustBuster SPEED KING INC.

P.O.Box 1438 Dodge City, Kansas 67801 (620) 227-7106